EUROCAVE
12.0
EUROCAVE
INVENTOR OF THE WINE CABINET
Designed and Made in France since 1976.
LA PREMIERE MEDIUM
V-LAPREMIERE-M

EUROCAVE

CREATOR OF THE WINE CABINET

Designed and made in France since 1976,
EuroCave Wine Cabinets are the best in the world.

Made in France

EuroCave is the only wine cabinet manufacturer to design and make cabinets in France, the global heartland of the wine industry.

Highest Quality Standards

Bestowed with the EPV label, which recognises EuroCave's unwavering dedication to exceptional manufacturing standards.

Award Winning Innovation

Winner of multiple Red Dot Design Awards, one of the world's most prestigious design competitions, recognising their unique features.

Exclusive Patented Technology

EuroCave's elite engineering and design team have developed proprietary technology that delivers unapparelled cellaring precision.

Customise Shelving To Suit Your Collection

Multipurpose shelves allow you to choose bottle orientation so you can configure and adapt the cabinet to suit your wine collection while also accommodating larger bottle sizes.

Multiple Temperature Cabinets

In addition to Single and Dual Temp options, EuroCave offers Multi Temp wine cabinets with a gradation of temperature within one zone so all wine varietals can be served at ideal drinking temperature.

Trusted Worldwide

Recommended by sommeliers and restaurants around the world. Over 40 million bottles are entrusted to our cabinets in more than 70 countries.

LA PREMIERE MEDIUM WINE CABINET

Superior Cellaring Conditions

Consistent Temperature	EuroCave wine cabinets maintain consistent set temperature thanks to their exclusive technology, double glazed and argon filled doors, aluminium interior (vs ABS plastic used by many other manufacturers), high quality insulation (equivalent to 2.5m of earth or 4m of concrete) and magnetic door seals which ensure perfect closure.
Maintain Humidity	Working with ambient humidity, EuroCave wine cabinets maintain stable humidity levels which prevent corks from shrinking and spoiling wine.
Minimal Vibrations	Scientific institute INSA[1] confirmed that vibration frequencies in an empty EuroCave wine cabinet are 20 times lower than an equivalent competing model and 6 times lower in a full cabinet. This is achieved via ingenious design, silent blocks, high quality closing mechanisms and unique “Main du Sommelier” bottle cradles.
UV Protection	EuroCave doors filter over 97% of UV rays harmful to wine and are made of low emissivity treated technical glass. All internal lights are UV free.
High Air Quality	An internal fan and natural ventilation ensure continuous change of air within the cabinet. The activated carbon filter traps air impurities to avoid bad odours and mould.

Ultimate User Experience

Shelving Fits Larger Bottles	EuroCave wine cabinets can accommodate ALL bottle types common to Australian wine collections (e.g. Burgundy, Champagne, Riesling). This is achieved via; greater space between each shelf, and a large choice of shelving options. Many other wine cabinet brands are designed ONLY for slim Bordeaux bottles, so storing other types result in significantly lower bottle capacities and potential label scratching.
Display Wine Bottles	EuroCave provides a multitude of shelving options designed to either optimise capacity or showcase labels through various bottle orientations.
Luxurious Lighting	Showcase wine collections in soft white internal lighting that is not harmful to wine.
High Energy Efficiency	Consuming up to 67% less energy than mass market wine fridges, EuroCave wine cabinets are gentle on the environment and economical to run.
Low Noise Emissions	EuroCave wine cabinets have low acoustic levels as they are equipped with one of the quietest European-made compressors on the market and insulation that absorbs interior noise.
Touch Control Panel	Panel displays both temperature and humidity. Light settings can easily be changed and filter replacement reminders help protect wine collections.
Alarms & Locking System	Visual alarms activate if the door is accidentally left ajar. The robust locking system provides additional security.

SPECIFICATIONS

Bottle Capacity	98 - 170 bottles* (depends on shelving configuration and bottle types)
Temperature	Single Temp – ideal for cellaring all wine varietals
Temperature Range	6-18°C (enhanced fan system ensures even temperature distribution)
Control	Touch screen electronic temperature and humidity display, alarm and filter countdown
Energy Rating	A (154 kWh/year – Uses up to 67% less energy than traditional cabinets)
Door	Framed Glass Door (double glazed, argon filled & UV protected) or Solid Black Door
Opening	Right or left hinge
Security	Robust locking system with two keys and keyring
Handle	Handle recessed inside door for a sleek look
Shelving Types	Comes standard with multipurpose sliding shelves
Shelving Configuration	Comes standard with 4 multipurpose shelves
Shelves Facia	Light beechwood timber facias with an eco-friendly water-based varnish
Shelving Spacing	Greater distance between shelves to fit wider bottles and eliminate label scratching
Bottle Supports	"3 in 1" multipurpose shelves that can be easily adjusted to sliding, storing, presentation for all bottle shapes
Shelf Labels	Labels come with each shelf
Lighting	Internal white LED lighting
Noise	Quieter than a standard fridge
Filter	Carbon filter ensures air remains fresh
Room Temp	0-35°C
Cold Production	Compressor (R600a gas)
Inner Material	Aluminium
Exterior Coating	HPL panel (High pressure laminates)
Insulation Type	PU foam (59mm)
Warranty	3 years

DIMENSIONS

Height (mm)	1480
Width (mm)	680
Depth (mm)	690*
Cabinet weight (kg)	81

Framed Glass Door

Solid Black Door

*720mm with stop at the back

FREQUENTLY ASKED QUESTIONS

Why are EuroCave wine cabinets considered to be the best globally?
EuroCave invented the very first wine cabinet in 1976. They are dedicated to producing the highest quality, most aesthetically pleasing, and technologically advanced wine cabinets in the world. EuroCave wine cabinets are designed AND manufactured in France, and they address all the requirements for cellaring wine correctly. A strong focus on high energy efficiency, unique and patented features, and longevity makes EuroCave stand out from mass market wine fridge brands.

EuroCave is the wine cabinet of choice for serious wine enthusiasts, and they are featured globally in many hatted restaurants, leading wineries, 5-star hotels and luxury residential developments.

Why haven't I heard about EuroCave before?
With over 80 distributors worldwide, EuroCave has a significant presence in Europe, USA, Asia and other parts of the world. In Australia, EuroCave has been distributed directly to the end customer for over 25 years. Dedicated to producing the best wine cabinet, EuroCave reinvests in R&D rather than 'above the line' advertising.

What is the bottle capacity of a EuroCave wine cabinet?
A wine cabinet's bottle capacity will vary, depending on shelving configuration and type of bottles. Many brands highlight 'maximum bottle capacity' numbers and this generally assumes that ONLY Bordeaux bottles (the thinnest, shortest and rarely used by Australian wine producers) are being used inside the wine cabinet. EuroCave provides a bottle capacity range. Please refer to the bottle capacity provided in the 'Specifications' section of this Product Guide.

Every EuroCave cabinet receives a meticulous quality assurance check before leaving the warehouse to ensure all systems are functioning, and the unit is clean, scratch free and ready for its new home.

Can EuroCave wine cabinets accommodate ALL bottle types?
EuroCave wine cabinets can accommodate ALL bottle types common to Australian wine collections (eg. Burgundy, Champagne, Riesling). Many other wine cabinet brands are ONLY suited to the slimmer Bordeaux bottles, resulting in significantly lower bottle capacities and/or potential label scratching. EuroCave wine cabinets can also accommodate magnums.

What is the difference between a single and multiple temperature wine cabinet?
A single temperature wine cabinet can be set anywhere between 6°C and 18°C, and this will apply for ALL wine inside the unit.

A multiple temperature EuroCave wine cabinet provides a 'gradation' of temperature from the bottom shelf (coldest), to the top shelf, all in the ONE zone. This allows all wine varietals to be served at their ideal drinking temperature so all wines are ready to enjoy. Perfect for the entertainer.

What are ideal conditions for cellaring wine?
ALL wine (whites, reds, rose, sparkling) needs to be cellared at the SAME temperature. EuroCave addresses all 5 criteria required for cellaring wine:

1. Consistent low temperature (12-14°C)
2. High humidity (around 65-75% is ideal)
3. Minimal vibration
4. Fresh airflow
5. UV protection

FREQUENTLY ASKED QUESTIONS

Ideal Cellaring and Drinking Temperatures

Wine Variety	Cellaring Temperature	Drinking Temperature
Cabernet/Shiraz	14°C	18°C
Pinot Noir	14°C	14°C
Chardonnay	14°C	10°C
Sauvignon Blanc	14°C	8°C
Champagne	14°C	6°C

What is the best temperature for drinking wine?
It is ONLY when we are just about to serve wine that we need to bring it to drinking temperature. Please see the table above for ideal drinking temperatures of some wine varietals.

What's the right wine cabinet for the collector?
For the wine collector looking to protect their wine longer term, we recommend a large, single temperature Royale, La Premiere, Compact or Inspiration wine cabinet for protecting and cellaring their collection as the winemaker intended. To enjoy a bottle, white wine could simply be placed in the fridge for 20 mins before serving. Conversely, remove a bottle of red 20 mins or so before drinking.

Are EuroCave wine cabinets noisy?
No. EuroCave wine cabinets are quieter than a standard fridge; 37(dB(A)).

Where should I install the power point?
Position the power point at the back of your wine cabinet, towards the bottom. The use of multi socket plugs and extensions is not recommended. If installing multiple units, we recommend a separate power supply for each.

How energy efficient are EuroCave wine cabinets?
Very! A large single temperature EuroCave wine cabinet consumes approximately 200 Watts of power when the ambient room temperature is at 25°C, or 128-165 kWh/year on average, depending on the model.

Can the handle be removed?
EuroCave handles come packaged inside the unit. They can be easily attached if required or can remain detached. Doors can easily be opened without attaching the handle.

Can we change the lighting options?
EuroCave uses lighting which enhances the ambience of wine collections. The colour of the lighting cannot be changed. EuroCave Champagne wine cabinet can be ordered with a choice between three colour options; amber, blue or red. All wine cabinets have 3 setting options for lighting; 1) Lights remain on, 2) Lights remain off 3) Lights turn on only when the door is opened.

Can EuroCave wine cabinets go outdoors?
No. EuroCave wine cabinets are not weatherproof and must be kept away from harsh conditions.

USABILITY, CARE AND MAINTENANCE

How do I get the best out of the EuroCave wine cabinet?
Scan the QR code below to Register your EuroCave for Warranty, gain access to the Quick Start Guide, Maintenance Information, Product Guides, User Manuals and more.

Do I need to remove the cabinet from its location for maintenance?
No, the cabinet can remain in place for regular filter replacement and cleaning.

For technical issues involving the cooling system or electronic control panel, the cabinet may need to be moved. This must be performed by a qualified technician recommended by a EuroCave vendor.

There is a horizontal 'bar' across the middle of my wine cabinet. Can this be removed?
No, the horizontal 'Bracing Bar' located in the middle of a large wine cabinet is needed to reinforce its structure and avoid any deformation over time. It should not be removed.

Can I control humidity?
Whilst EuroCave wine cabinets display both temperature and humidity, humidity in any wine cabinet cannot be controlled because it is influenced by the ambient humidity in its specific environment. Humidity does not need to be as precise as temperature; it should be above 50% and ideally 65% to 75% to prevent corks from drying out and ultimately oxidizing wine.

What temperature do I set the EuroCave?
Set a single temperature model to 14°C to cellar all wine varietals. Set to 8°C for service temperature of white wine only. Set to 18°C for serving of red wine only.

For a multiple temperature model, set the minimum to 8°C (bottom) and the maximum to 18°C (top). A 10°C variance must be allowed. Please see the table on previous page for ideal drinking temperatures.

FREQUENTLY ASKED QUESTIONS

LA PREMIERE WINE CABINET

Are 3D files available?

Yes, 3D files for each model can be found by scanning the QR code.

Can the La Premiere Range be built into joinery?
Yes. Please refer to the Installation Instructions in this Product Guide.

Are there any special ventilation requirements?
Yes. Please refer to the Installation Instructions in this Product Guide.

Are the doors reversible?
Yes.

Can a joinery panel be attached to the door?
No. The La Premiere has a framed glass door that is not designed to be attached to joinery. A black piano door option is available.

What about the door swing? Does it have to open at 180 degrees to pull out a shelf? Can I position the La Premiere next to a wall?
La Premiere can be positioned adjacent to a wall because shelves can fully slide out when the door is opened to 90 degrees. Also, whilst the inset door hinge 'protrudes' only 3mm at most (when the door is open at its maximum of 45 degrees), a 10mm gap should be kept between the wall and the La Premiere.

Can the La Premiere wine cabinet be placed in a room, without building it into joinery?
Yes. All EuroCave La Premiere wine cabinets can be 'freestanding'.

Can I place multiple EuroCave's side by side?
Yes. For aesthetic purposes, we recommend placing a solid vertical panel between each EuroCave wine cabinet. Allow at least 10mm between walls/panels and wine cabinets for ventilation and ease of installation. It is very difficult to perfectly 'line' up wine cabinets as most walls / floors and joinery are 'out', even by a few millimetres. Please refer to the Installation Instructions in this Product Guide.

Can I change the lighting options?
There are 3 setting options for lighting; 1) Lights remain on, 2) Lights remain off 3) Lights turn on only when the door is opened.

What are the electricity requirements?
All EuroCave wine cabinets can simply be plugged into a standard power point (standard 10A outlet, on a 16A circuit, earthed with 30mA circuit breaker).

LA PREMIERE MEDIUM WINE CABINET INSTALLATION INSTRUCTIONS

Diagram drawings refer to the large model. Please refer to the measurement tables for this specific size.

Dimensions

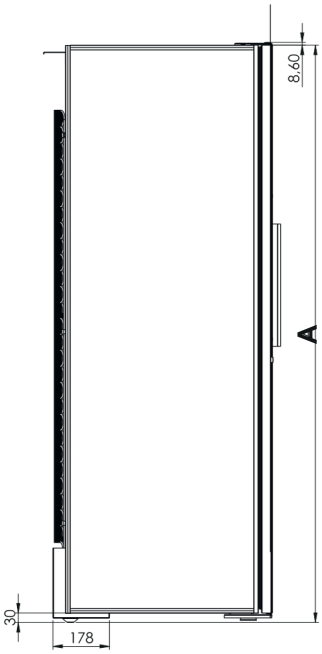

Side View

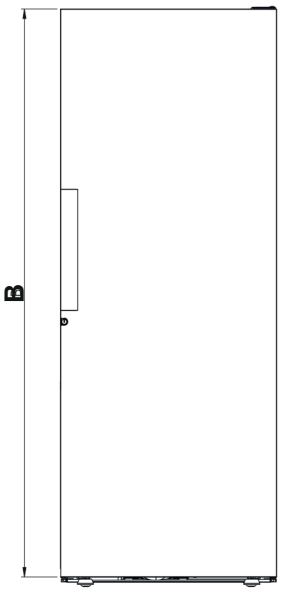

Front View

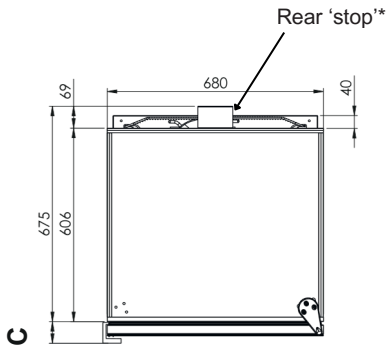

A (mm)[1]	B (mm)
1464	1434

C (mm)	
Depth of Framed Glass door	48

*The condenser coil sits 40mm off the back of the unit, and the rear 'stop' protrudes an extra 29 mm from the condenser coil.
[1] Adjustable feet at the lowest position.

Dimensions and ventilation when building into joinery (per unit)

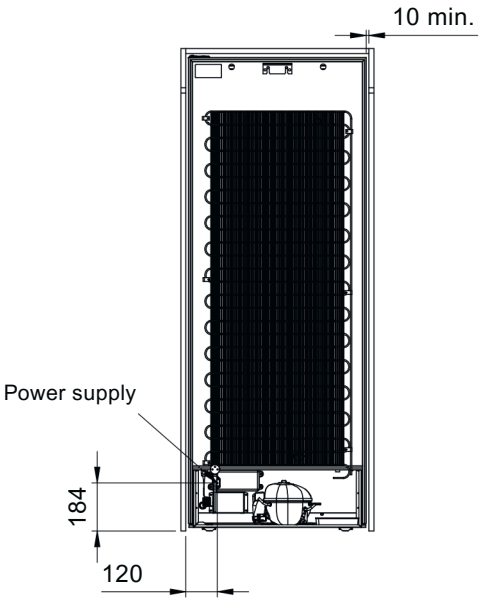

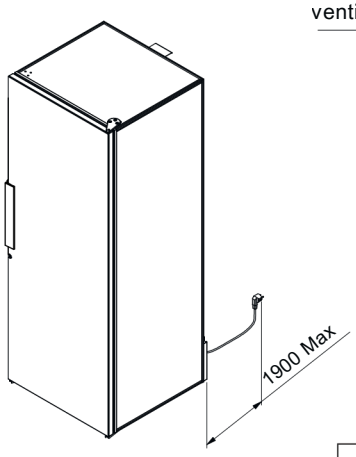

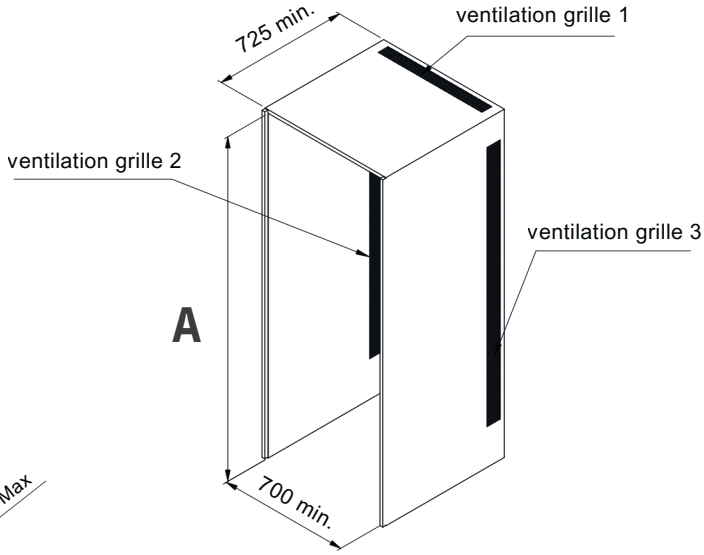

A min (mm)	Ventilation grille 1 (cm2)	Ventilation grille 2 (cm2)	Ventilation grille 3 (cm2)
1479	350	600	600

EUROCAVE

Installing two cabinets side by side

per unit			
A min (mm)	Ventilation grille 1 (cm2)	Ventilation grille 2 (cm2)	Ventilation grille 3 (cm2)
1479	350	600	600

A

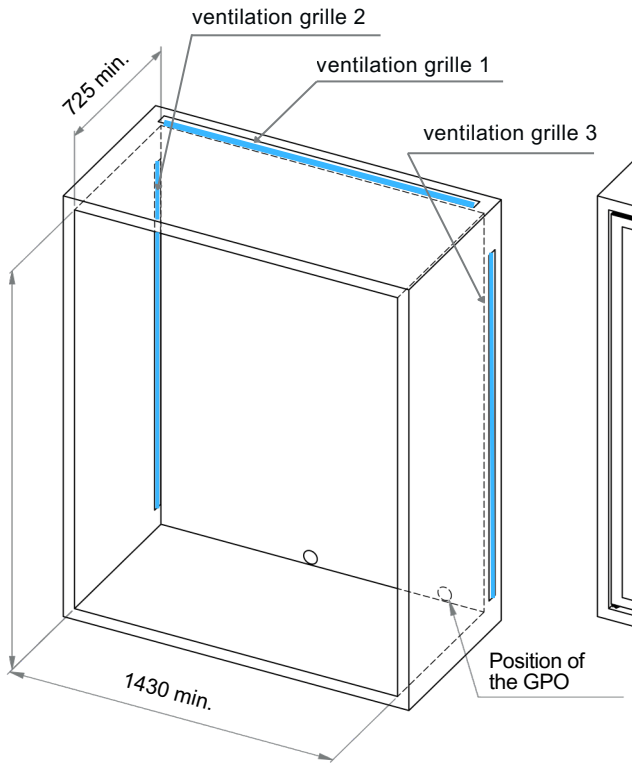

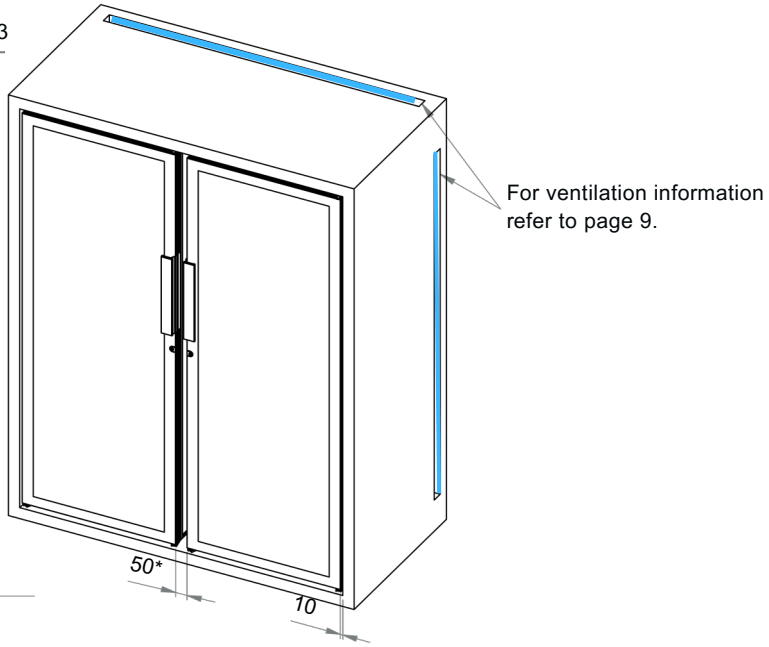

Installing three cabinets side by side

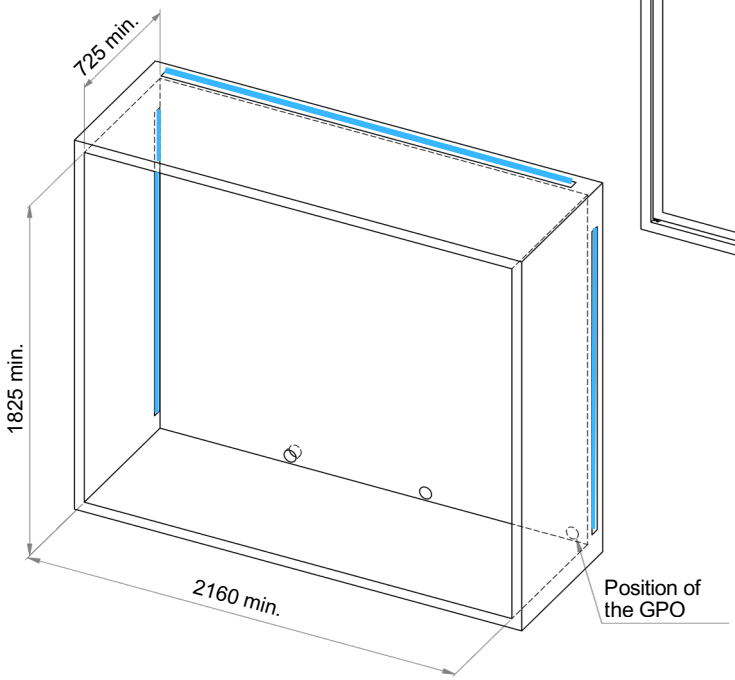

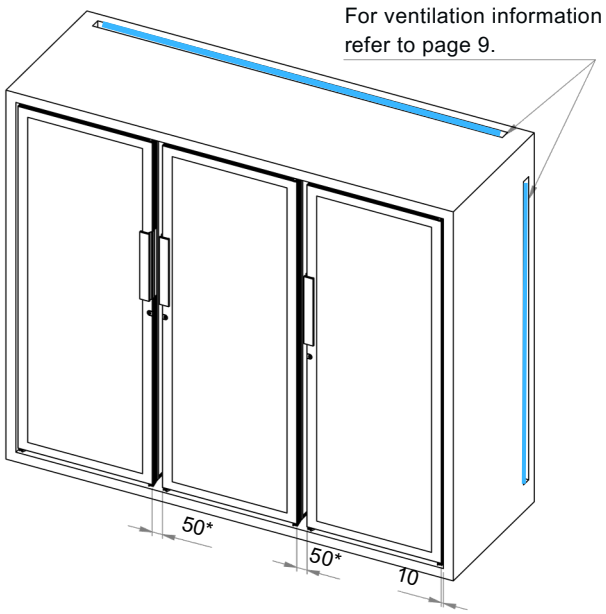

*Please note: 20 mm between the two wine cabinets can be enough if the humidity rate of the room where the cabinets are installed is between 55% and 60%.

Above 70% humidity, a space of 50 mm between the two cabinets must be respected in order to ensure good air circulation between the two cabinets and avoid any risk of condensation, as this could lead to mould.

INSTALLING YOUR EUROCAVE

1. Your EuroCave must be situated in a well ventilated room (e.g. not in an enclosed cupboard) that is not too humid (e.g. laundry, bathroom).
2. Place the wine cabinet near its final location (which must have a level and stable floor).
3. Ensure it is supplied with power (standard outlet, 16 A, earthed with 30mA circuit breaker).
4. To maximise energy efficiency, attach the 'Stop' (from the accessories kit) to the back of the cabinet. This ensures a space of 69mm between the wall and the rear of the cabinet. To fix the ‘Stop’, gently place the two caps in the two holes at the top of the cabinet. Do not push the caps all the way in. Slide the ‘Stop’ downwards, then push the two caps all the way in.
5. Ensure the power lead is securely plugged into both the unit’s socket, (located at the back / near the bottom of the cabinet) and power point. Switch on the power point.
6. If you need to adjust the feet, tilt the cabinet slightly to screw/unscrew the feet.
7. Remove the transportation locks supporting each shelf (these are only required during transport).
8. Remove the door stopper (this is only required during transport).
9. Unless already installed, push the carbon filter (from accessories kit) into the hole inside the top/back panel (top shelf may need to be removed). Press to set the filter countdown, then "+" to reset to 365 days.
10. Place your EuroCave in its final location, then load your wine, starting from the bottom shelf and wait 48hrs before starting up your EuroCave.

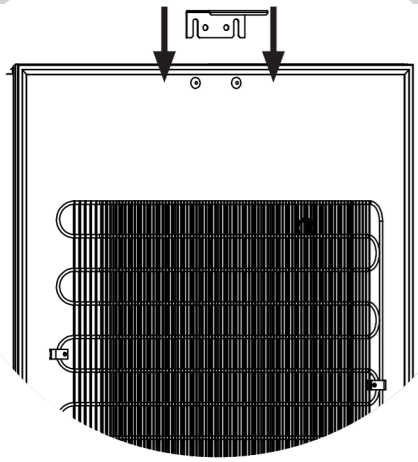

Important!
Ventiliation when building into joinery

Ensuring good ventilation to a wine cabinet
when built-in up to the ceiling.

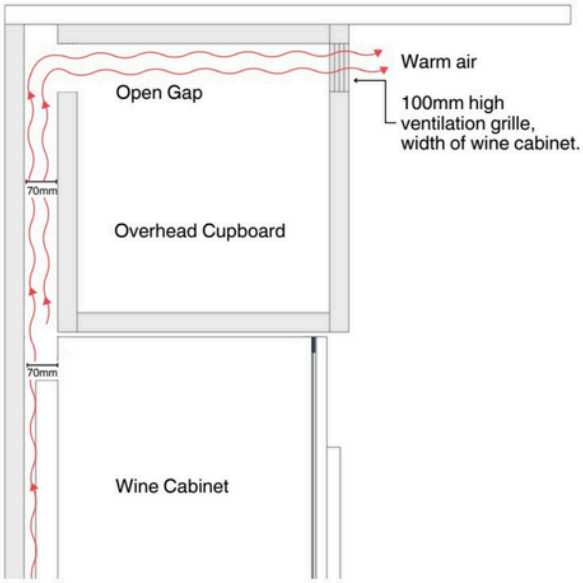

Side View

PRODUCT INFORMATION

Product specifications and information contained in this document are accurate as at the date of issue. For up to date information please refer to macphees.com.au

All information supplied is to be used for general reference purposes only and is on the understanding that MacPhee's Wine Cellaring Specialists will not be liable for any loss, liability or damage of whatever kind arising as a result of reliance on such information.

TERMS & CONDITIONS

For our full set of Terms and Conditions, please scan the QR code below:

CONTACT

EUROCAVE

Imported and distributed by MacPhee's Wine Cellaring Specialists

info@macphees.com.au
+61 03 9696 5200 or 1800 733 621

[1]INSA, a scientific institute based in Lyon (France) conducted a study on the level of vibrations in the wine cabinet. The test was conducted by 4 experts for 4 months on 4 brands.